INTEGRATED ARCHITECTURAL SYSTEMS

LINEAR PRODUCT GUIDE

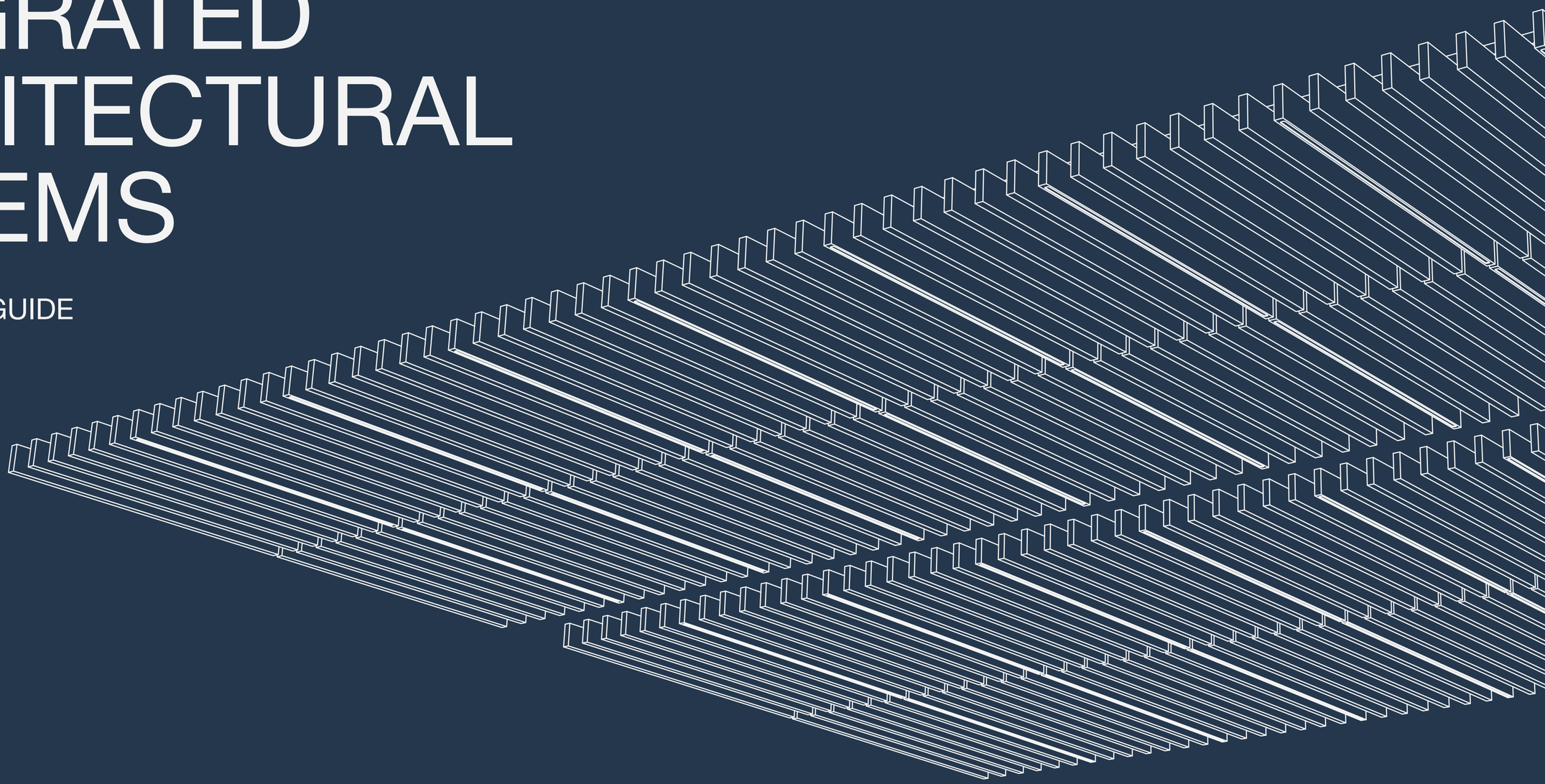

aaline
architectural lighting + acoustics

Certified B Corporation

A SYSTEM BUILT ON ENDLESS POSSIBILITIES

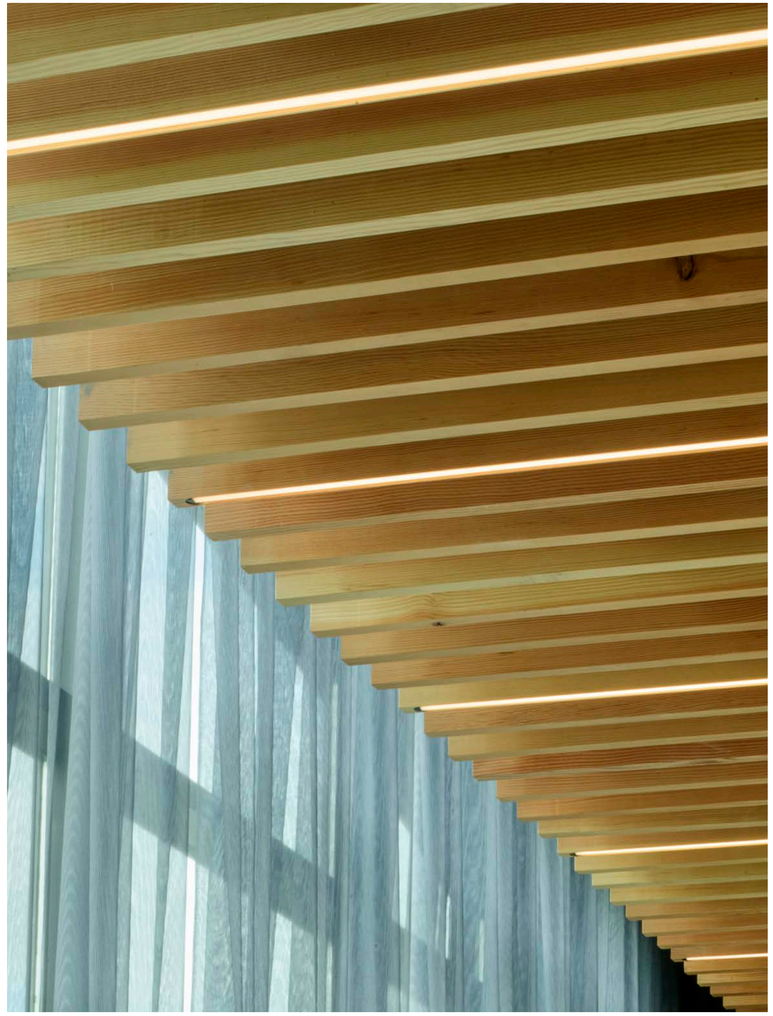

Our Integrated Architectural Systems Linear feature our customizable Linear Baffles with each dimension and opening made to spec as a turnkey solution for lighting and acoustics. Baffles are designed as building blocks to frame the ceiling above, prompting different light engines and finishes for a unique fixture each time.

INTRO:
A TURNKEY SOLUTION

We pride ourselves on being positioned to offer a turnkey solution for your lighting and acoustics needs. Each system is specified with a baffle system to your specification, your choice of acoustic backing, and an integrated lighting engine tuned to your requirements.

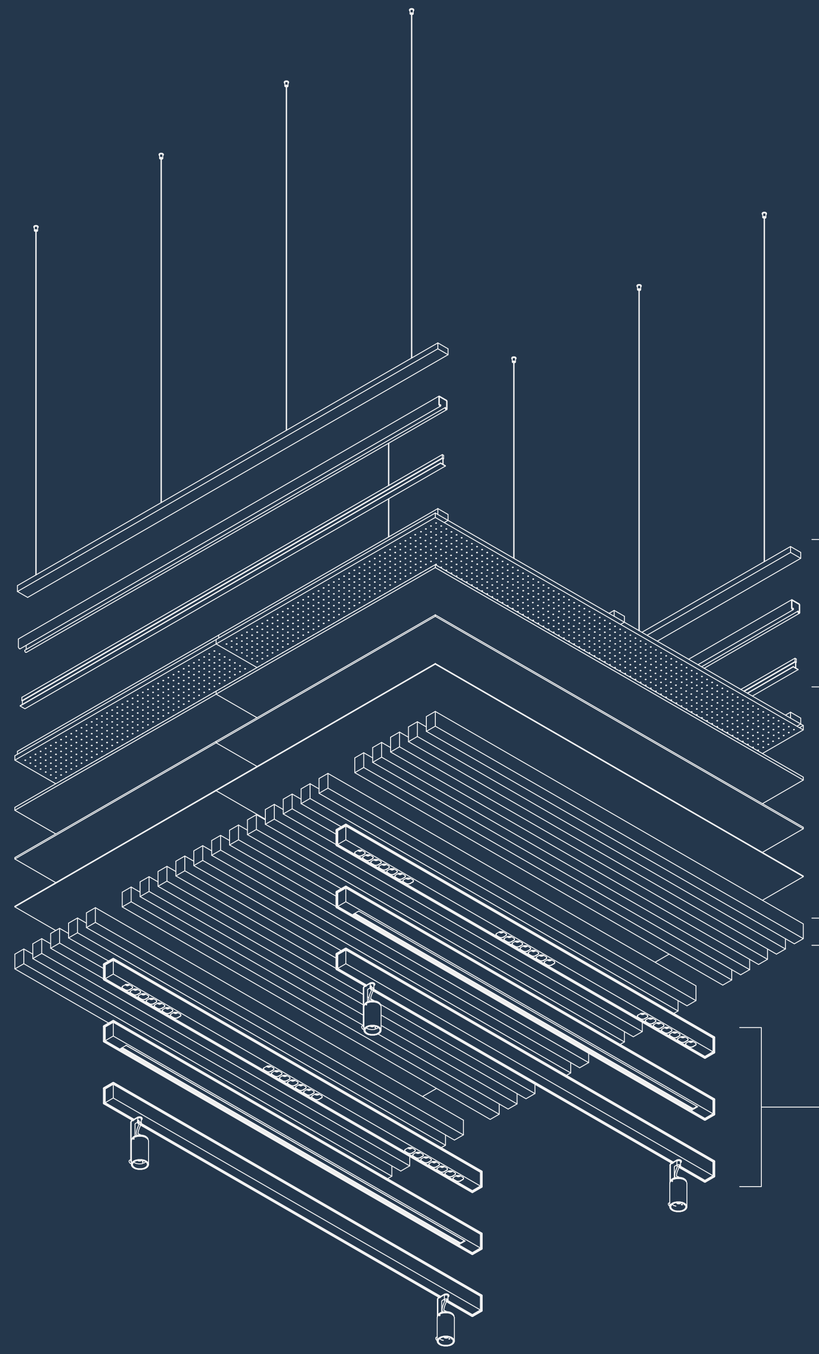

ACOUSTIC BACKING
:ontrol your NRC coefficient
th different acoustic layering

MOUNTING
Suspended, T-Bar,
Flush, Unistrut

BAFFLES
Based on your specification,
individually mounted or made
in modules

INTEGRATED FIXTURES
Based on your specification,
individually mounted


Linear Embedded fixtures integrated into flush-mounted slat system, with slight protrusion
SEPT
21
Seamless continuation on wall

PART 1: BAFFLES

DEFINE YOUR DIMENSIONS

Each IAS module comes in the same standard kit of parts for easy specification, configurable to your desired look in dimension and lighting components.

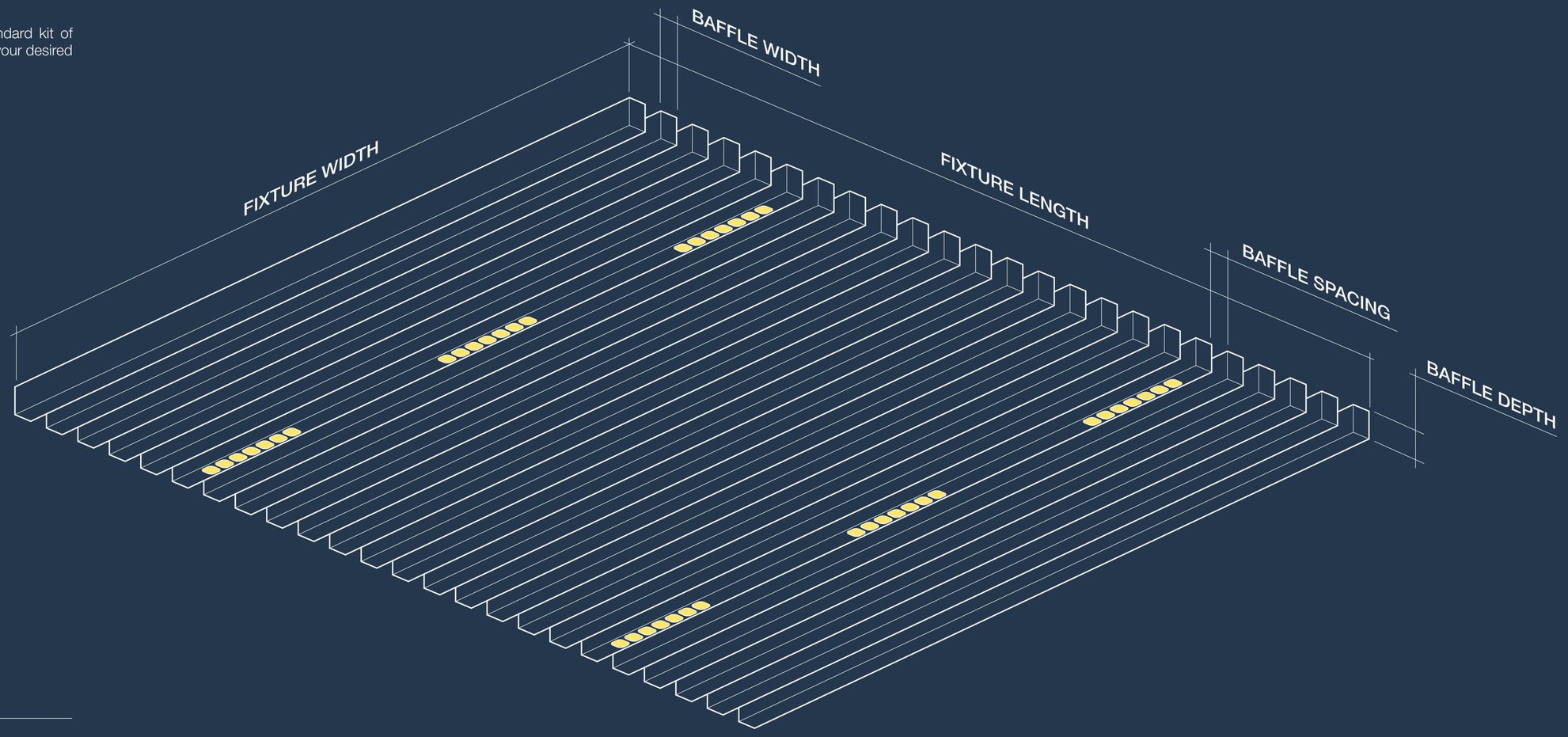

FIXTURE WIDTH	Min. 1’ - Infinite Max. 6’ Module
FIXTURE LENGTH	Min. 1’ - Infinite Individual Baffles
BAFFLE WIDTH	Min. 3/4” - Max. 6”
BAFFLE SPACING	Min. 1/2” - Infinite
BAFFLE DEPTH	Min. 3/4” - Max. 6”

Additional restrictions apply. See specification sheet for more details.
All parameters and dimensions to be confirmed in shop drawings.

PART 1: BAFFLES

EXAMPLE DIMENSIONS

Different specifications can greatly dictate the final look of your fixture. Our 3D software makes updating these parameters efficient, providing you with any visualizations you need to make your decision.

EDGE GRAIN

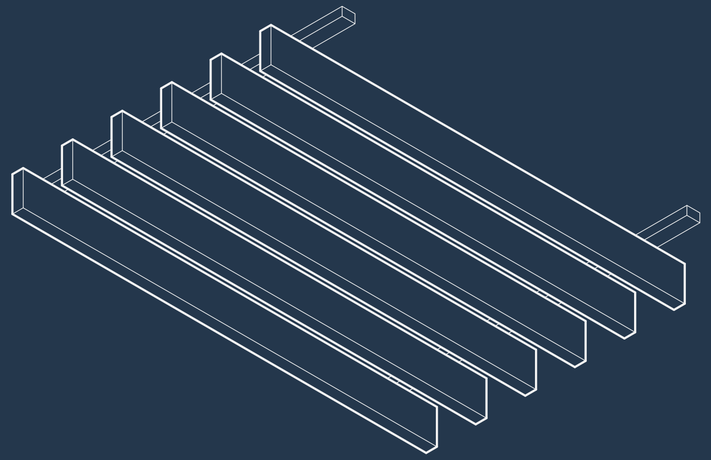

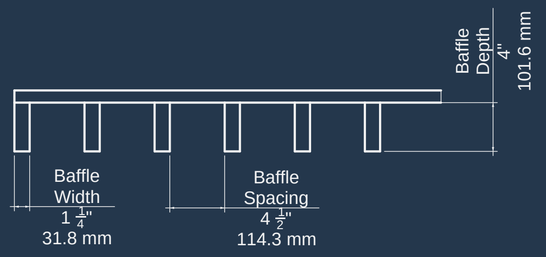

FACE GRAIN

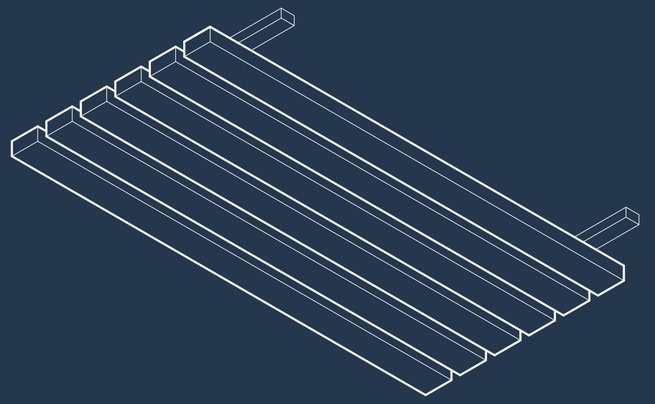

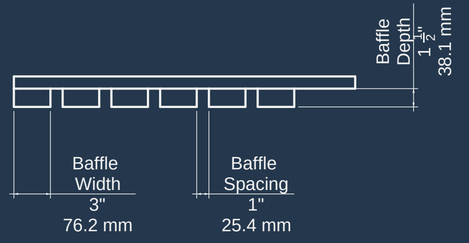

Additional restrictions apply. See specification sheet for more details.
All parameters and dimensions to be confirmed in shop drawings.

PART 1: BAFFLES

WHAT TO CONSIDER

We want to provide you with the best systems and services that accompanies all your concerns and fits seamlessly within your existing space. Providing us with a floor plan grants us full realization of any factors that need to be considered when planning out a custom IAS.

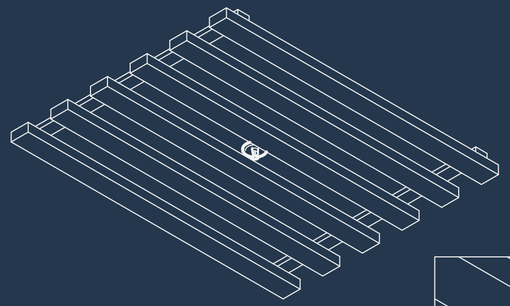



SPRINKLER SYSTEMS

We can cater to spaces that require sprinkler system clearance, either with a specified spacing between baffles or increased clearance in focused sections where sprinklers reside.

HVAC CONSIDERATIONS

Our systems are manufactured in-house and can accommodate specific requests that require non-standard or custom modules to dodge or provide access to HVAC units.

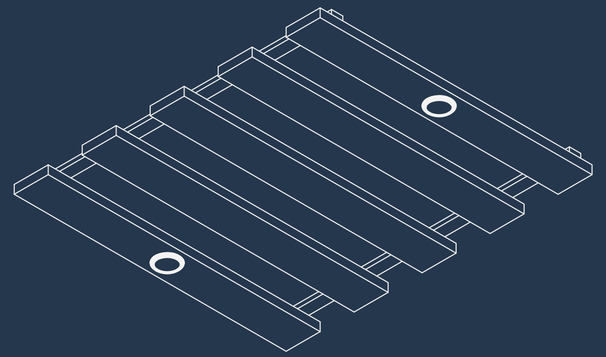

INTEGRATED SPEAKERS

At certain widths, we can integrate speakers into your baffle systems to further control acoustic support and improve accessibility.

PART 2: LIGHTING

CHOOSE YOUR ENGINE

Our IAS systems offer 3 different integrated lighting engines to customize the light output and look in your space. Choose to mix and match fixtures across the system. Each fixture is attached to the mounting hardware individually, allowing specification by quantity.

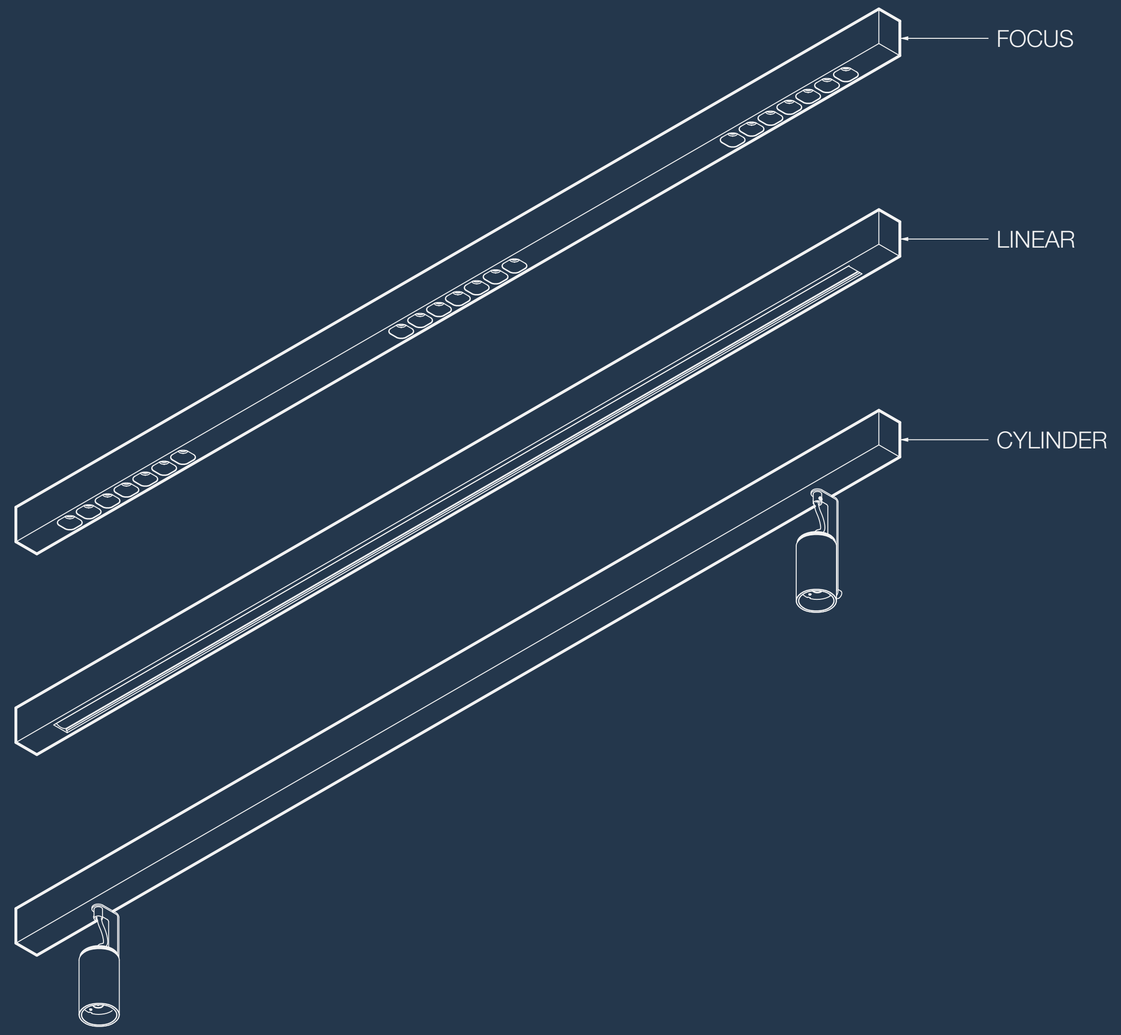

FOCUS	7-celled modules with UGR<16
LINEAR	Single, linear light with minimal breaks
CYLINDER	Articulating point light at set locations

PART 2:
LIGHTING

TUNED TO YOUR SPACE

We calculate the minimum number of fixtures required in the space and tune the fixtures so the light level stays the same regardless of the ceiling height.

9FT CEILING

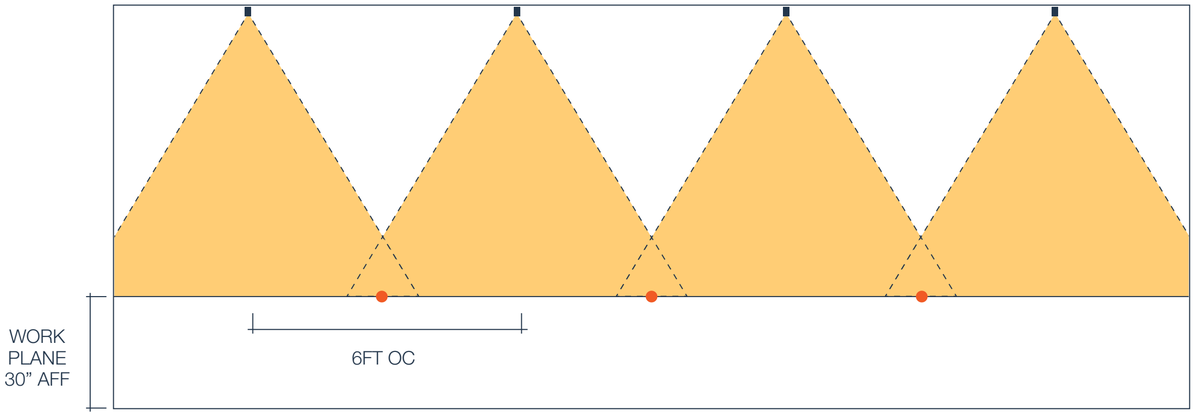

4 FIXTURES

STANDARD OUTPUT

14FT CEILING

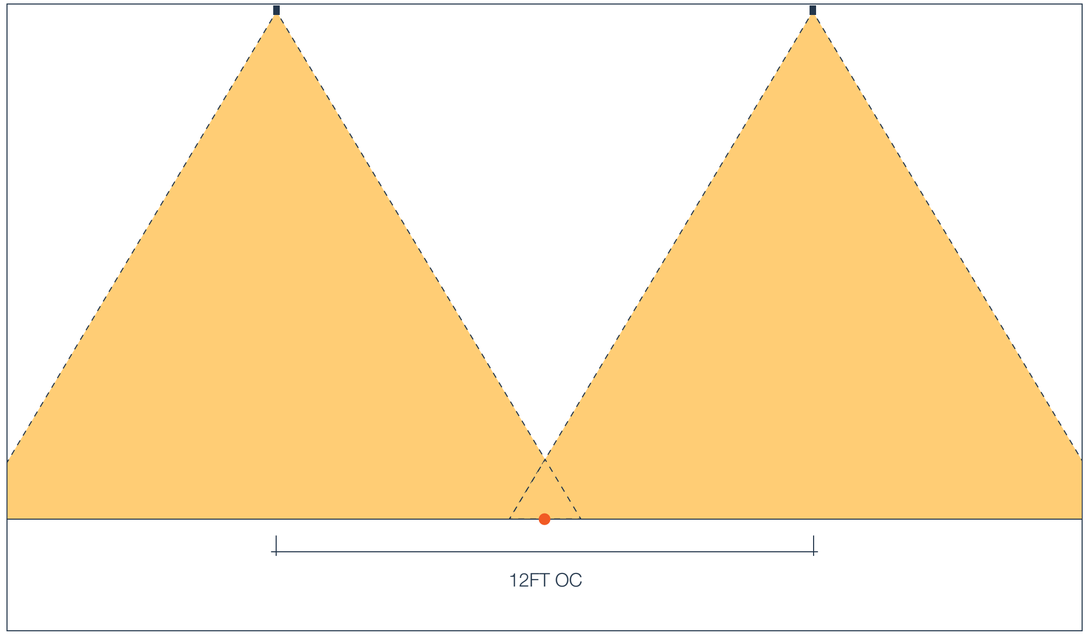

2 FIXTURES

STANDARD OUTPUT

TUNED TO MATCH

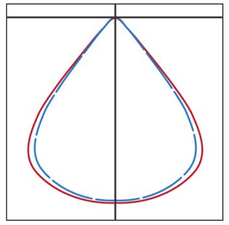

WIDE OPTICS
~80°

PART 2: LIGHTING

CCT + FINISHES

We offer a variety of FSC-Certified wood species and finishes, including Class A Fire-Rated Finishes. Standard and custom paint finishes are also available, see the specification sheet for more.

2700K
WARM WHITE
90+ CRI

3000K
SOFT WHITE
90+ CRI

3500K
NATURAL WHITE
90+ CRI

4000K
COOL WHITE
90+ CRI

3000K - 1800K
DIM-TO-WARM
90+ CRI



WALNUT



WHITE OAK



CHERRY



HARD MAPLE



WHITE ASH



ENGINEERED
WOOD



ACCOYA



DOUGLAS FIR



PART 3:
ACOUSTIC BACKING

NOISE REDUCTION COEFFICIENT

Our IAS are designed to bring you both acoustic and lighting control with one system. Choose between different NRC levels and finishes to manage the level of reverberation in the room.

NRC: UP TO 0.8

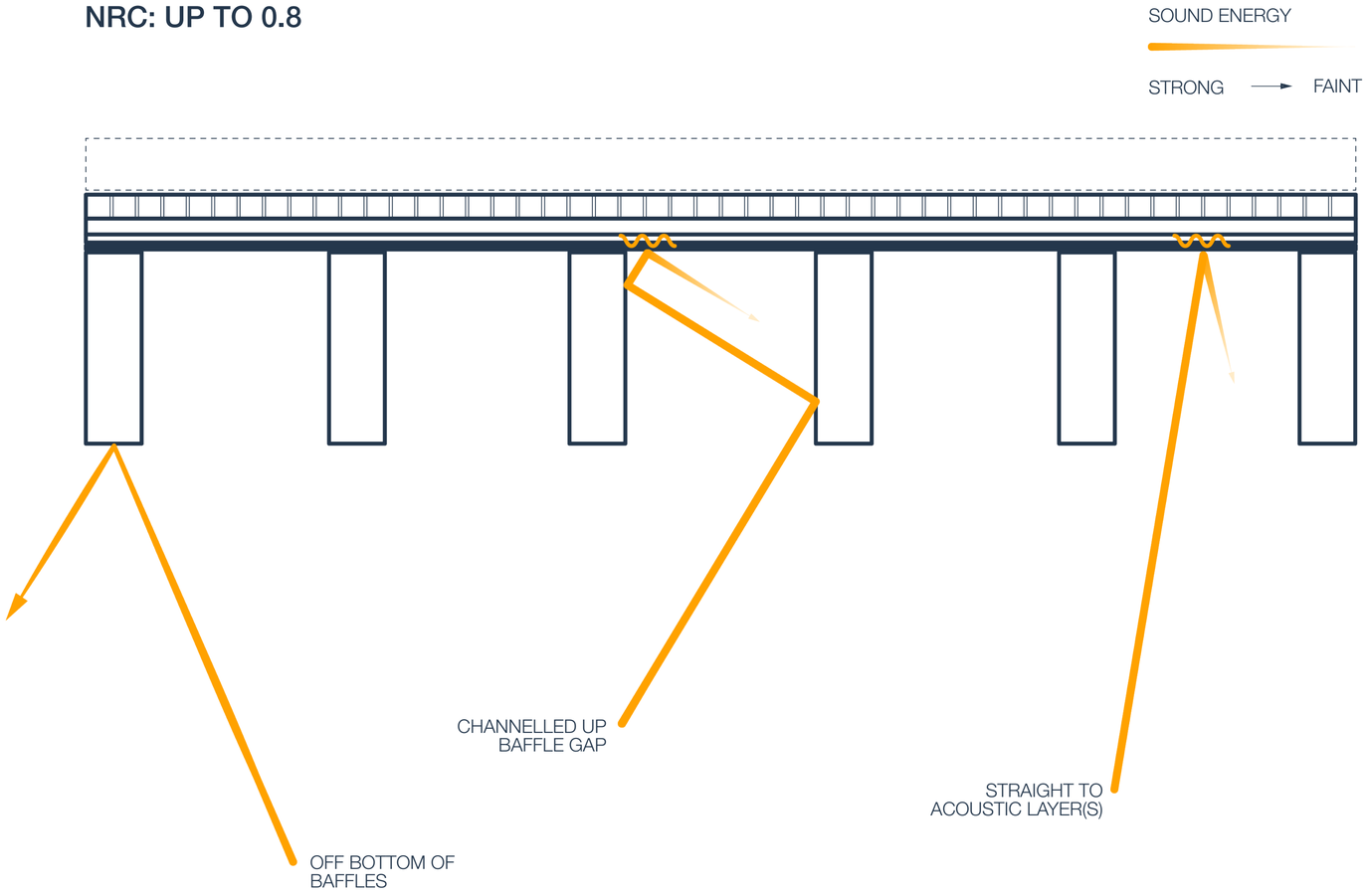

PART 3:
ACOUSTIC BACKING

NOISE REDUCTION COEFFICIENT

Our IAS are designed to bring you both acoustic and lighting control with one system. Choose between different NRC levels and finishes to manage the level of reverberation in the room.

NRC: UP TO 0.15

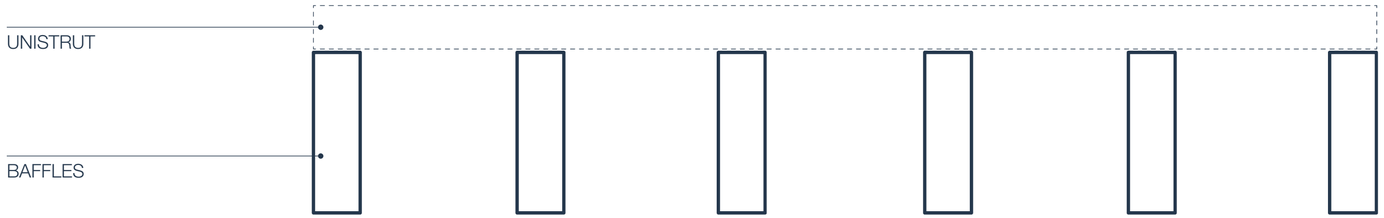

NRC: UP TO 0.35

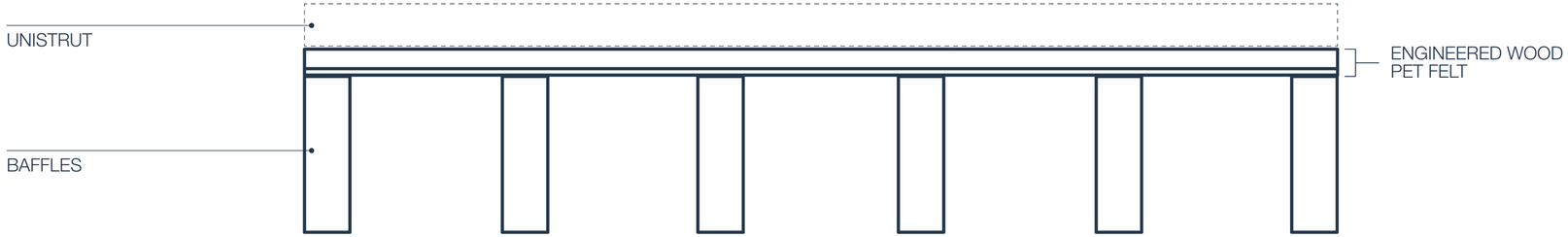

NRC: UP TO 0.8

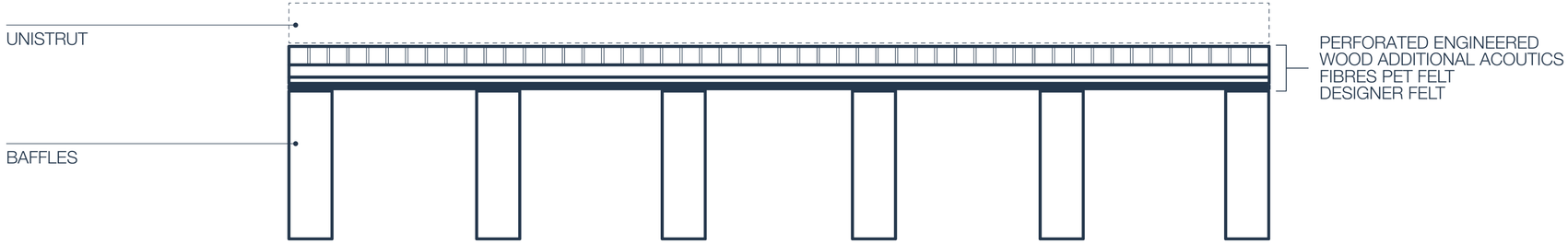

PART 3:
ACOUSTIC BACKING

DESIGNER FELT FINISHES

MONOCHROME TONES

F311
WOOL WHITE

F312
RAW WHITE

F382
PEBBLE

F382
CONCRETE
GRAY

F383
STONE GRAY

F384
CHARCOAL

F371
BURNT OAK

EARTH TONES

F221
VANILLA

F231
BURNT
ORANGE

F251
MEADOW
GREEN

F261
SKY BLUE

F271
SIERRA
BROWN

F272
SAND

F275
CASHMERE

SOLD TONES

F111
WHITE

F121
CITRUS

F122
CANARY

F123
DIJON

F133
BRIGHT RED

F134
CHERRY

F135
COPPER

F141
BURGUNDY

F142
FUCHSIA

F143
AUBERGINE

F145
LAVENDER

F146
ROSE

F152
OLIVE

F154
TEAL

F155
FOREST
GREEN

F156
MOSS

F157
MINT

F158
PEACOCK

F162
ARCTIC

F163
MIDNIGHT

F164
ELECTRIC

F182
STORM GRAY

F183
BLACK

F184
AQUA

F185
MIST

F186
OVERCAST

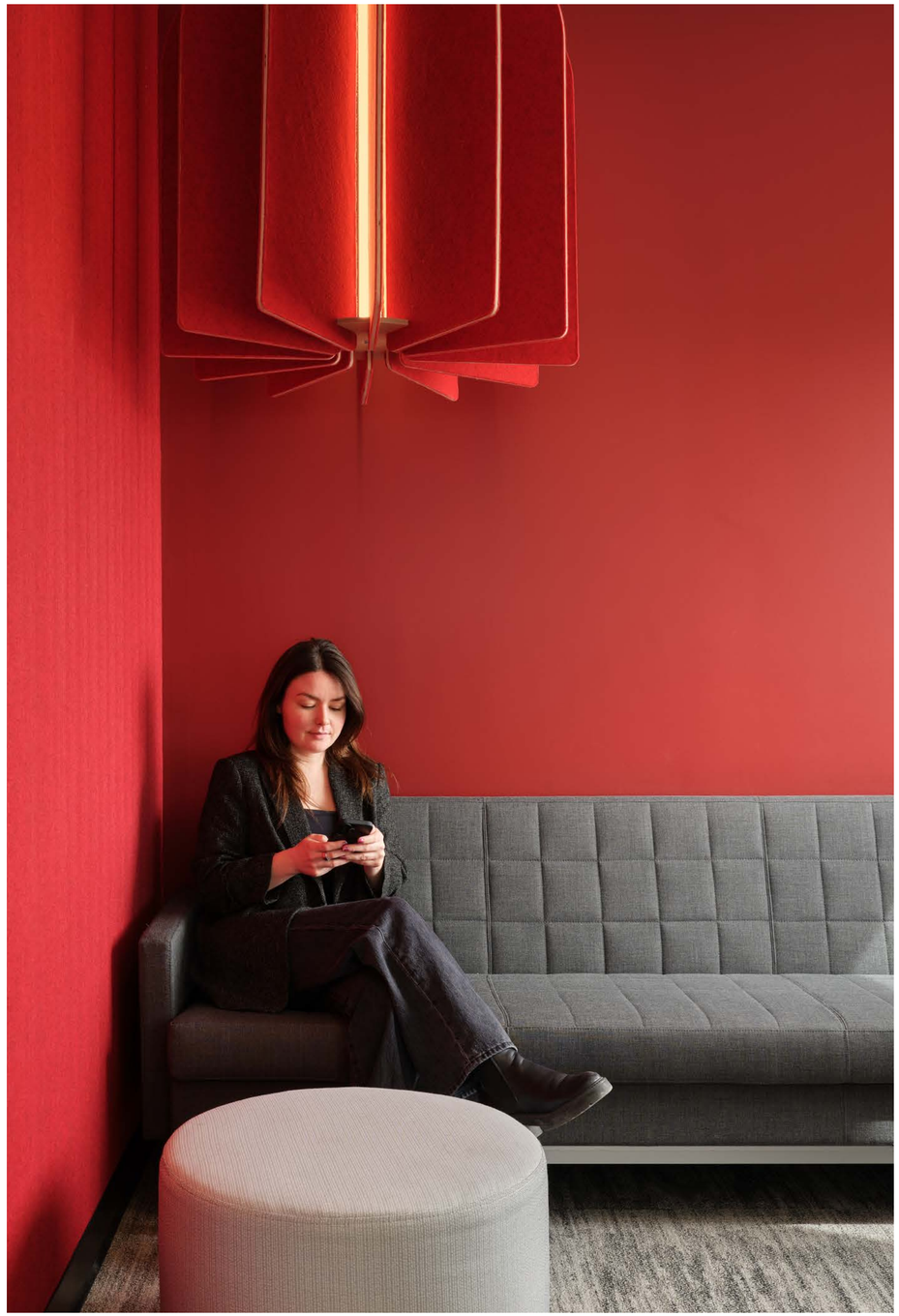

PART 4:
MOUNTING

We offer various mounting options to work with you existing conditions. Choose between Independent, T-Bar, Flush, and Unistrut mounting based on the desired look you are going for. Contact us to inquire about custom mounting options.



INDEPENDENT
Suspension cable is separate from Junction Box



T-BAR
T-bar suspension for 15/16” t-bar widths



FLUSH MOUNT
Minimal offset from ceiling



UNISTRUT
Compatible 1-5/8” Unistrut hardware

Mounting hardware subject to change based on project requirements and complexity.



WE LOOK FORWARD TO WORKING WITH YOU

aaline
architectural lighting + acoustics